AARDWOLF INDUSTRIES LLC

AARDWOLF DOUBLE FORKLIFT BOOM 5000

OWNER'S MANUAL

PRODUCT CODE: DFB2-5000

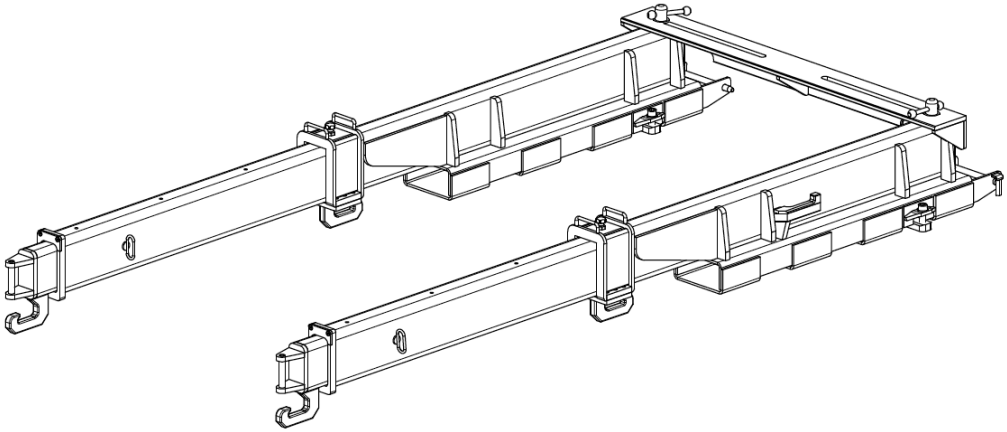

CONTENTS

SAFETY PRECAUTIONS ▶ INSTALLATION INSTRUCTIONS ▶ BEFORE OPERATION

INSTRUCTIONS FOR USE ▶ PARTD DRAWING & PART LIST ▶ CENTER OF GRAVITY DIAGRAM

LOAD CAPACITY CHART ▶ CENTER OF GRAVITY DIAGRAM ▶ CERTICFICATE OF ASSURANCE ▶ WARRANTY

The Aardwolf Double Forklift Boom is a telescoping two section rectangular tube steel boom designed for removing bundles of marble and granite slabs from closed top containers. Thanks to its design, without any impediments between the fork booms, the operator can insert the full length of the booms into the container and bring the load right back to the fork mask, allowing for greater load capacity and more stability. This attachment can support a load capacity of up to 5,000 kgs. Installing it is very simple, thanks to its double-fork design. The Aardwolf Double Forklift Boom is powder-coated for extra durability and longevity, so the operator can use it for years to come.

SAFETY PRECAUTIONS

Read the owner's manual before operating unit:

1. Always secure the Aardwolf Forklift Boom to fork truck carriage with locking bolts & restraint pins.
2. Never stand underneath the lifting device when in use.
3. Be sure fork mast is tilted back toward the driver.
4. The forklift will become unstable and liable to tip forward if the forklift is overloaded. A safe working load will vary according to lift truck capacity. Check the load capacity of the forklift for being used.
5. Do not add counter-weights to enable forklifts to lift heavier weights than it is designed for.

INSTALLATION INSTRUCTIONS

1. Insert forks through fork pockets of the boom so that the backside of the forklift boom is in contact with the fork carriage of the fork truck.
2. Lock boom firmly onto fork blades by tightening the two bolts located on the back of each fork pocket.
3. Insert restraint pins behind fork uprights to stop the forklift boom from moving forward.
4. Make desired adjustments to boom length by sliding the inner extension tube in or out of main tube, and locking it with locking pin.

BEFORE OPERATION

1. Ensure that forks of forklift are completely through boom fork pockets and that the boom is against the fork upright, near the carriage of the forklift.
2. Secure the forklift boom to forklift truck by locking the boom firmly onto fork blades by tightening the two bolts located at the back of each fork pocket. Utilize the restraint pins, which double as spanners for this operation.
3. Insert restraints pins behind fork uprights to stop the boom from moving forward.
4. Adjust the dimensions of the stone bundle and the hook positions so that it fits together and they are balanced.

5. Extend the telescopic tube to the desired distance and secure with locking pin. Ensure the pin is a locking the telescopic tube is in place and it cannot move horizontally.
6. Review boom capacity to ensure the boom can lift the desired load at the desired distance safely.
7. Review forklift owner's manual for forklift capacity at the load center of gravity distance and raised height to ensure the forklift can lift the desired load safely.
8. Do not use the boom if it has damaged.
9. Tilt mast back toward the driver.

NOTE: Safe working load will vary according to lift truck capacity. Never overload the forklift!

INSTRUCTIONS FOR USE

1. Wrap lifting chain, nylon strap, around the load you desire to move. Secure the stone bundle to boom utilizing one or both front and rear hooks of the hook bar.
   NOTE: Do not place the chain, nylon strap on the sharp edges to prevent it is damaged.
2. Lift the stone bundle slowly. If the forklift begins to rise, the stone bundle is too heavy for the forklift. Unattached the stone bundle and move the center of the stone bundle closer to the forklift. It may require pushing the telescoping tube back into the larger pipe and locking it into position. Make sure all personnel are clear before attempting to lift the load. If the bundle does not raise evenly, re-center the lifting chains so the load remains parallel with the surface.
3. Ensure all personnel is clear of the area.
4. When removing an object from a stack, as soon as it is clear of the stack lower it to traveling height (as low as possible).
5. Transport the load to the desired location. Move slowly, avoid sharp turns, or turns at high speed. Avoid all bumps and inclines/declines. Suddenly stops and starts should also be avoided.
6. Raise/Lower the load into the desired position. Lower the load slowly into place.
7. Un-attach load-lifting chains from the boom. Push telescoping boom back into larger tube and secure with locking pin.

AARDWOLF DOUBLE FORKLIFT BOOM DFB2-5000
ASSEMBLY DIAGRAM

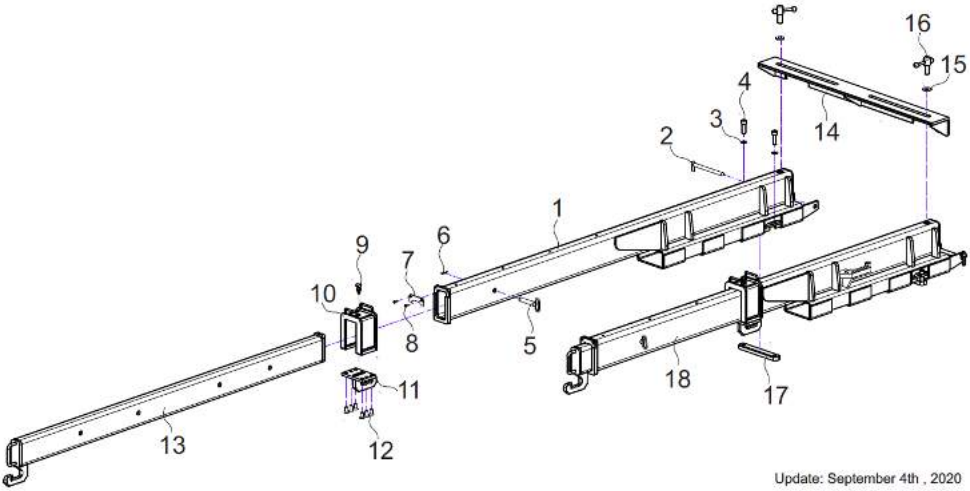

Please note: When assembling match number on upright with number on base.

PARTS LIST

POSITION	DESCRIPTION	QTY.	CODE
1	Left Hand	01	DFB2-5000-01
2	Hexagon Pin	02	DFB2-5000-02
3	Washer Ø20	04	DFB2-5000-03
4	Hexagon Socket Head Cap Screw M20x65	04	DFB2-5000-04
5	Locking Pin	02	DFB2-5000-05
6	Cotter Pin	02	DFB2-5000-06
7	Bar Cover	02	DFB2-5000-07
8	Hexagon Countersunk Head Screw M8x25	04	DFB2-5000-08
9	Latch Locking	02	DFB2-5000-09
10	Sliding Hook	02	DFB2-5000-10
11	Sliding Hook Base	02	DFB2-5000-11
12	Hexagon Countersunk Head Screw M16x35	12	DFB2-5000-12
13	Sliding Bar	02	DFB2-5000-13
14	Connection Bar	01	DFB2-5000-14
15	Washer Ø25	02	DFB2-5000-15
16	Locking Handle	02	DFB2-5000-16
17	Adjustable Bar	02	DFB2-5000-17
18	Right Hand	01	DFB2-5000-18

GRAVITY MOD. DFB2-5000

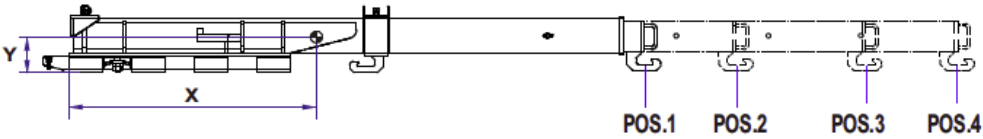

Positions	Capacity Kgs (lbs)	Center of Gravity	
		X mm (Inch)	Y mm (Inch)
POS.1	5000 (11000)	1290 (4'3")	196 (7.7")
POS.2	3500 (7700)	1459 (4'9")	196 (7.7")
POS.3	2500 (5500)	1687 (5'6")	196 (7.7")
POS.4	1500 (3300)	1883 (6'2")	196 (7.7")

MOD. DFB2-5000
Serial No.
Weight: 700 kgs
W.L.L.

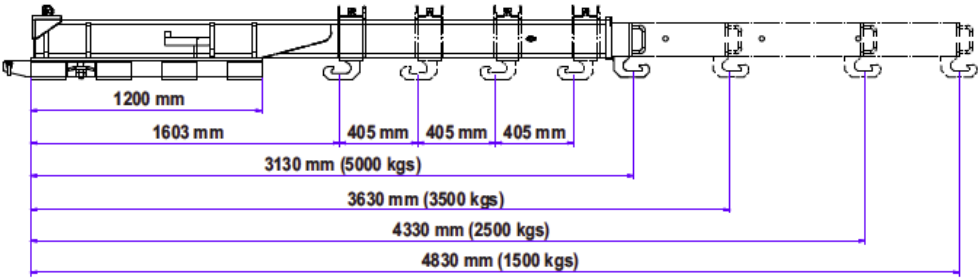

ACTUAL LOAD MAY BE RESTRICTED BY REFERENCE TO THE CAPACITY OF THE TRUCK

AARDWOLF©

LOAD CAPACITY CHART

DOUBLE FORKLIFT BOOM (DFB2-5000)

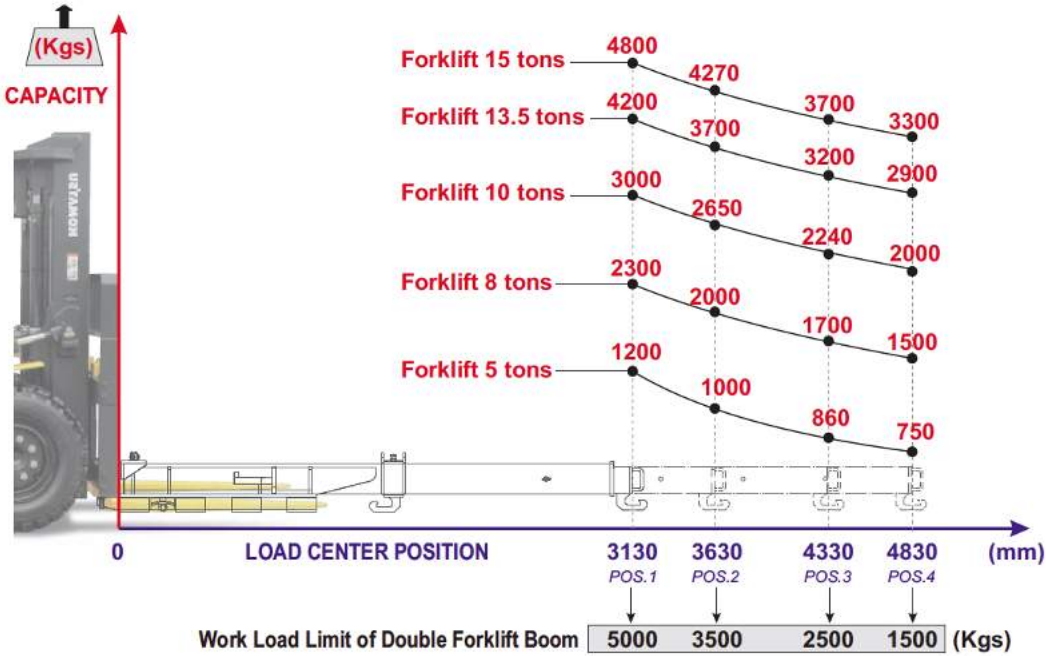

This certificate is your assurance that our Aardwolf Serial Fork Truck Booms and attachments are manufactured in accordance with our interpretations of applicable national OSHA (29CFR 1910.178) fork truck standards. Please realize that some portions of these standards are the responsibility of the end-user to fulfill, i.e., 29 CFR 1910.178 (a) (4). Modifications and additions with affect capacity and safe operation (of the fork truck) shall not be performed by the customer or user without the manufacturer's prior written approval. The capacity, operation, and maintenance instruction plates, tags or decals shall be changed accordingly.

CE-DECLARATION OF CONFORMITY

We declare that the product is in conformity with the following standard: The Machinery Directive 2006/42/EC.

NOTE: ***It is the responsibility of the user to adapt to state or local laws. The end-user is responsible to use the equipment safely in a manner that it is designed for and within the rated capacity of the unit.***

WARRANTY

This product is warranted for one year from the date of purchase to be free of manufacturing defects in material and workmanship. This warranty does not cover normal wear of parts or damage resulting from any of the following: negligent use or misuse of the product, use or application contrary to installation instructions, or disassembly, repair or an Iteration by any person before to authorization from a factory representative.

USA

AARDWOLF USA

19201 S Reyes Avenue, Unit C7
Compton California, 90221
(562) 553-6050
leo@aardwolfusa.com
www.aardwolfusa.com

AUSTRALIA

AARDWOLF AUSTRALIA

1/5 Stanton Road,
Seven Hills NSW 2147
+02 9838 8427
enquiries@aardwolfaustralia.com
www.aardwolfaustralia.com

GERMANY

STONE GLASS EQUIPMENT UG

Am GutstĶch 11, 8451 Crimmitschau
Blankenhain, Germany.
+49 366 0811 9236
sales@aardwolf.com.de
www.aardwolf.com.de

INDIA

AARDWOLF NORTH INDIA

Harmara Road, Industrial area,
Madanganj, Kishangarh, Rajasthan ñ
India / Pin no. 305801
Tel: +91 93584 48474
sales@aardwolf.co.in
Web: www.aardwolf.co.in

INDIA

AARDWOLF SOUTH INDIA

9/27, Ground Floor, 5th Main Road,
Ganesha Block, Sultanpalya,
R T Nagar Post, Bengaluru-560 032
Mob: +91 99017 24600
bengaluru@aardwolf.co.in
www.aardwolf.co.in

INDIA

AARDWOLF CENTRAL INDIA

Mob: 91 97659 06007
mumbai@aardwolf.co.in
www.aardwolf.co.in

VIETNAM

AARDWOLF VIETNAM

1B, An Phu, Thuan An,
Binh Duong, Vietnam.
+84 274 371 2827438/39
sales@aardwolf.com.au
www.aardwolf.com.au

© Aardwolf Industries LLC, 2021 - Designed in Vietnam